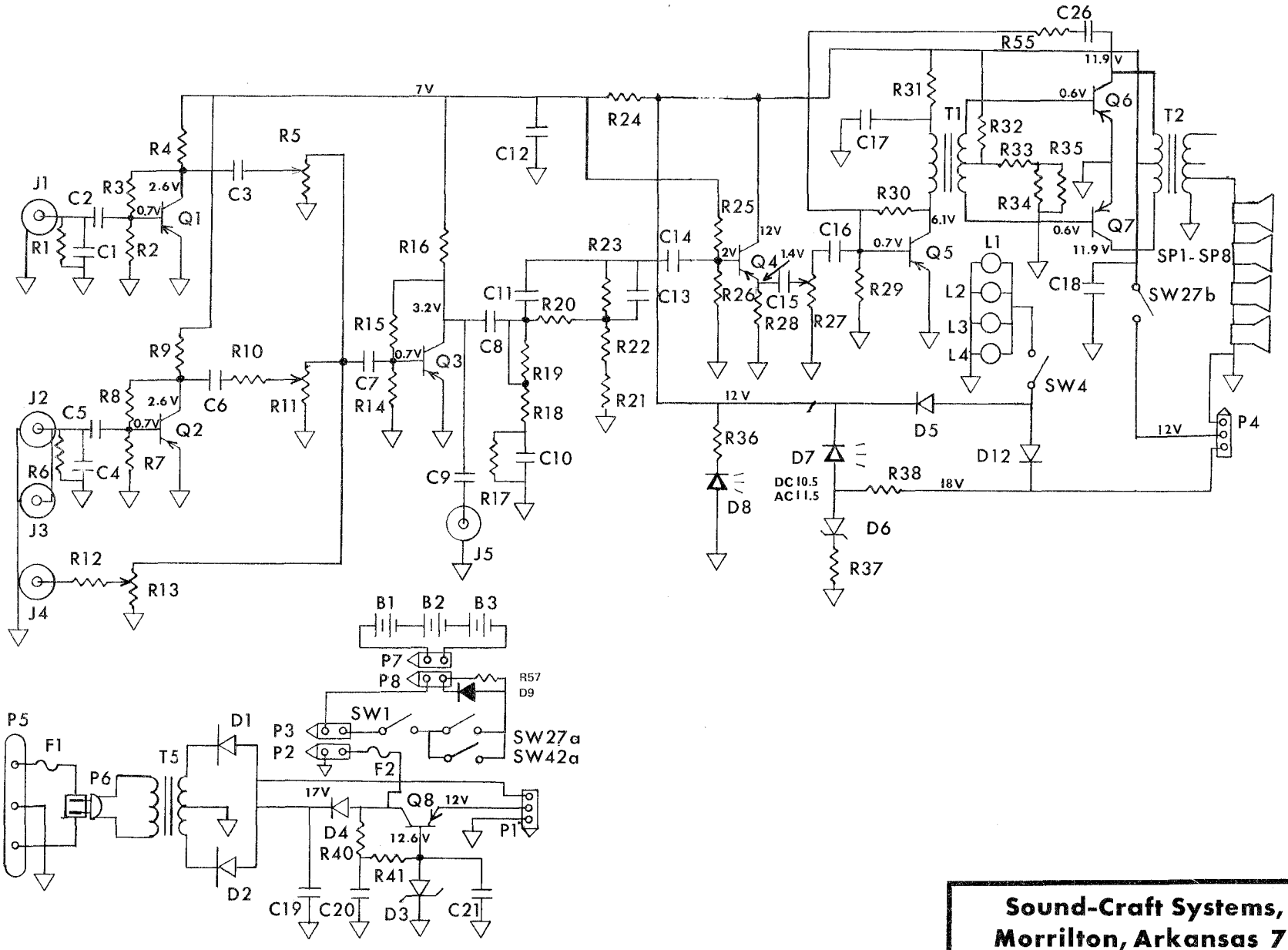

NOTES: All resistors ½ watt, 10% composition, value in ohms. All capacitors in microfarads. All voltages referenced to (+) positive ground with 20,000 ohms per volt meter. Measurement conditions: Amplifier(s) on. A.C. power connected.

REV. C 7-18-74
REV. B 1-15-74
REV. A 9-5-73

Sound-Craft Systems, Inc.
Morrilton, Arkansas 72110

SCHEMATIC DIAGRAM L40-10a

Made in U.S.A.