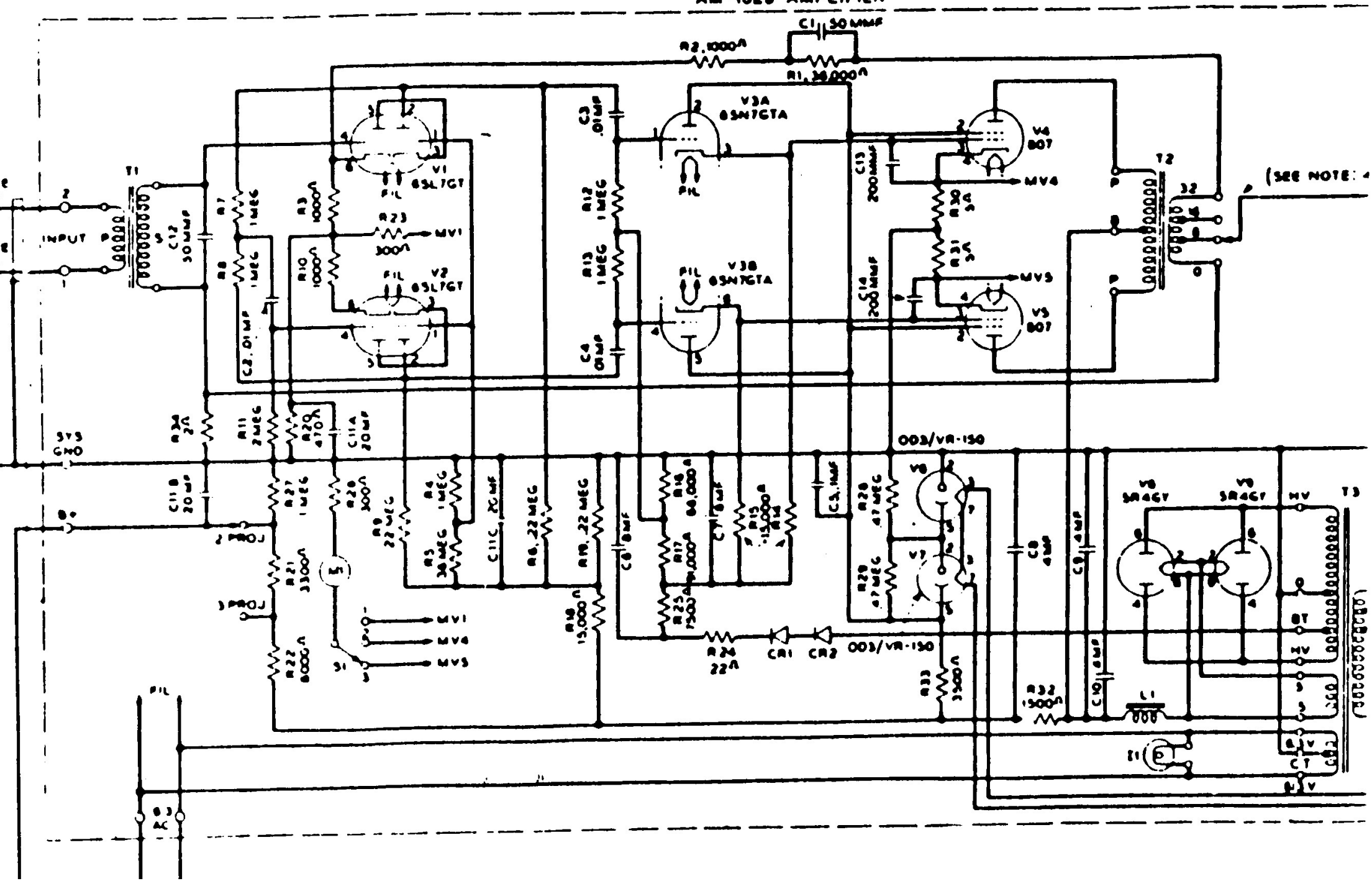AM-1026 AMPLIFIER