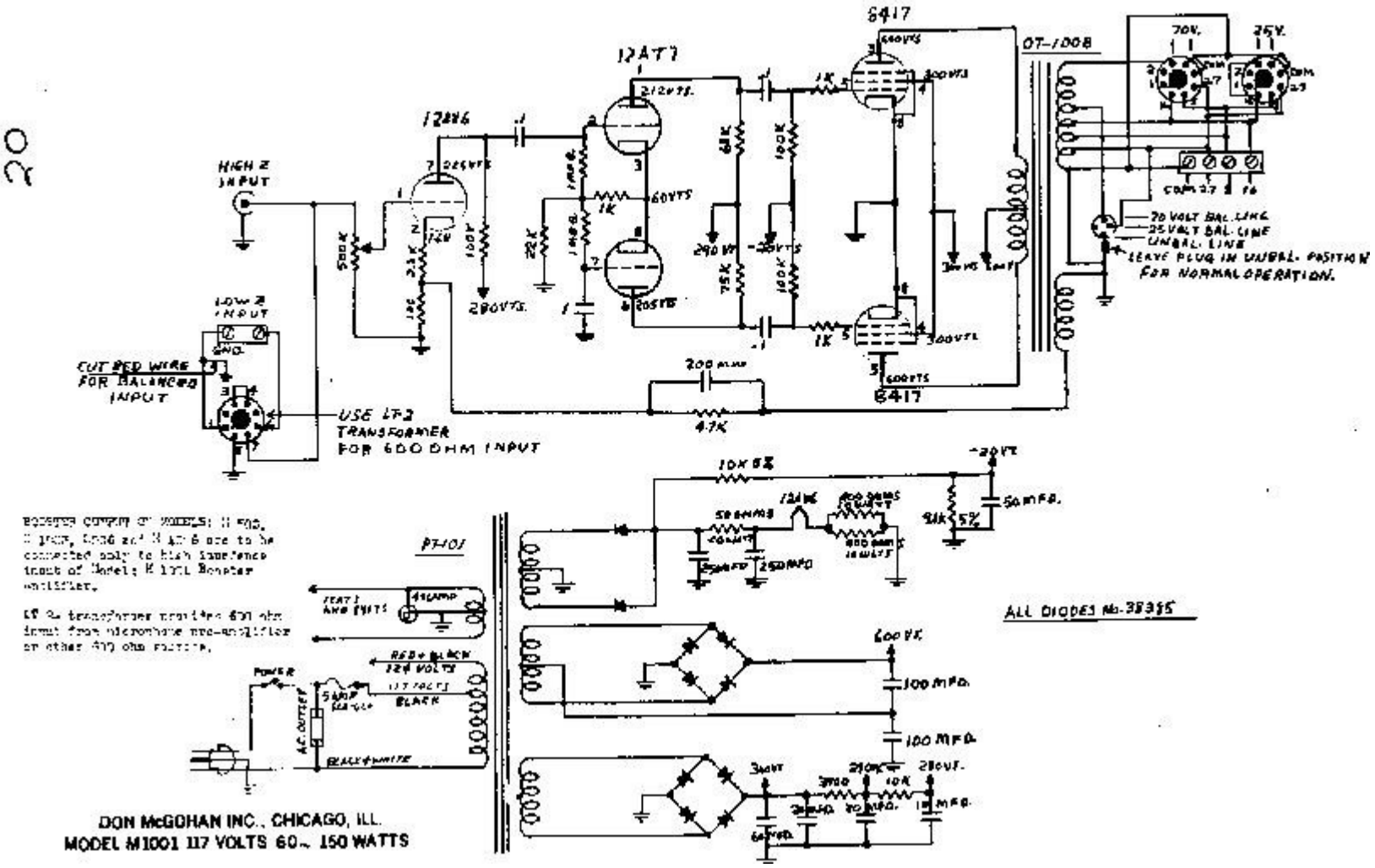
6417
12AT7
12AU6
OT-1008
HIGH Z INPUT
LOW Z INPUT
CUT RED WIRE FOR BALANCED INPUT
USE LT2 TRANSFORMER FOR 600 OHM INPUT
70V.
25V.
COM 27 25 16
70 VOLT BAL. LINE
25 VOLT BAL. LINE
UNBAL. LINE
LEAVE PLUG IN UNBAL. POSITION FOR NORMAL OPERATION.
280VTS.
200 MMF
4.7K
10K 5%
-20VT
50 MFD.
91K 5%
ALL DIODES No. 38355
600 VT.
100 MFD.
100 MFD.
280VT.
10K
1 MFD.
P7-101
POWER
A.C. OUTLET
RED + BLACK
BLACK
BLACK + WHITE
DON McGOHAN INC., CHICAGO, ILL.
MODEL M1001 117 VOLTS 60~ 150 WATTS