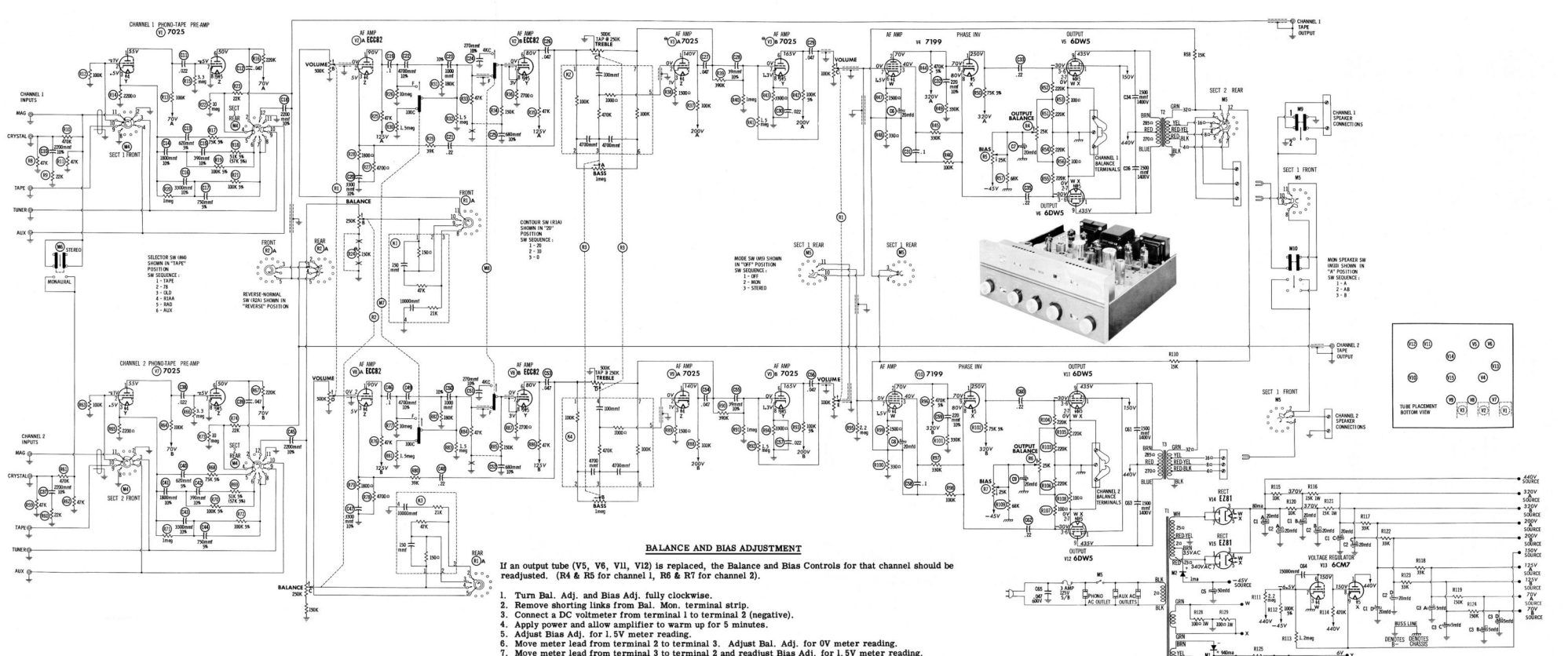

BALANCE AND BIAS ADJUSTMENT

If an output tube (V5, V6, V11, V12) is replaced, the Balance and Bias Controls for that channel should be readjusted. (R4 & R5 for channel 1, R6 & R7 for channel 2).

1. Turn Bal. Adj. and Bias Adj. fully clockwise.
2. Remove shorting links from Bal. Mon. terminal strip.
3. Connect a DC voltmeter from terminal 1 to terminal 2 (negative).
4. Apply power and allow amplifier to warm up for 5 minutes.
5. Adjust Bias Adj. for 1.5V meter reading.
6. Move meter lead from terminal 2 to terminal 3. Adjust Bal. Adj. for 0V meter reading.
7. Move meter lead from terminal 3 to terminal 2 and readjust Bias Adj. for 1.5V meter reading.
8. Repeat steps 6 and 7 until meter indicates 1.5V between terminals 1 and 2, and 0V between terminal 1 and 3.
9. Replace shorting links (1 & 2, 2 & 3).
10. Repeat for other channel if necessary.

BOGEN DB230