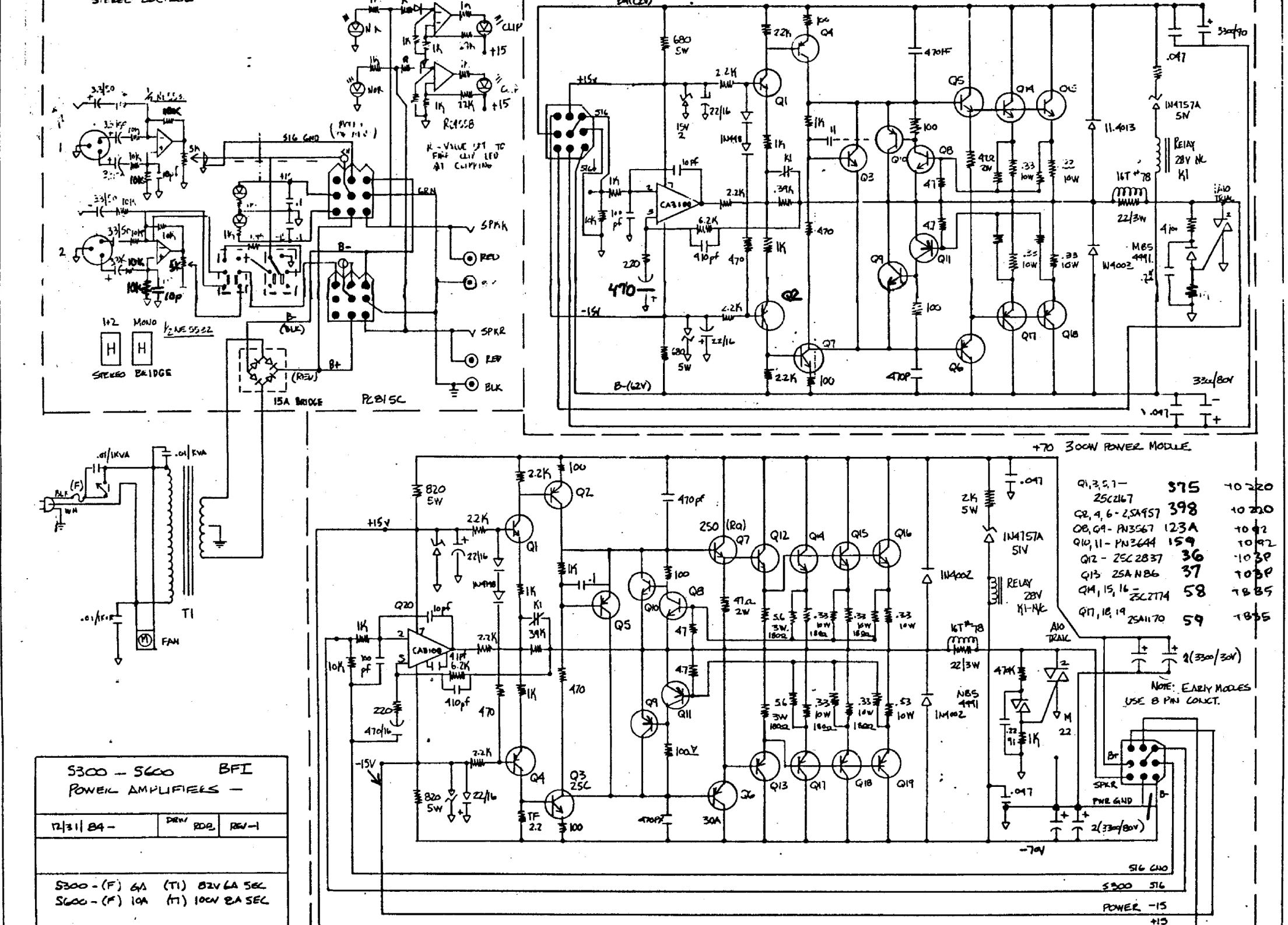

S300 – S600 BFI
POWER AMPLIFIERS –
12/31/84 –
DRW RDB
REV-1
S300 - (F) 6A (T1) 82V 6A SEC
S600 - (F) 10A (T1) 100V 8A SEC
+70 300W POWER MODULE
Q1,3,5,7 – 2SC2167 375 TO 220
Q2,4,6 - 2SA957 398 TO 220
Q8,Q9 - PN3567 123A TO 92
Q10,11 - PN3644 159 TO 92
Q12 - 2SC2837 36 TO 3P
Q13 2SA N86 37 TO 3P
Q14,15,16 - 2SC2774 58 TB 85
Q17,18,19 2SA1170 59 TB 35
NOTE: EARLY MODLES USE 8 PIN CONCT.
PC815C
15A BRIDGE
STEREO BRIDGE
1+2 MONO
1/2 NE5532
SPKR
RED
BLK
SPKR
RED
BLK
CLIP
+15
-15
B-(62V)
B+
B-
T1
FAN
CA3100
RELAY 28V NC K1
RELAY 28V K1-NC
1N4757A 51V
1N4002
1N4148
MBS 4991
A10 TRIAL
2(3300/30V)
2(3300/80V)
-70V
S16 GND
S300 S16
POWER -15
+15