UNITED TRANSFORMER CORPORATION

150 VARICK STREET, NEW YORK 13, N.Y.

RECOMMENDED VACUUM TUBE AMPLIFIER CIRCUIT PROVIDING 25 WATTS

± 1 db 40 cycles to 10 KC . . .

At 1 watt, ± 1 db 20 cycles to 20 KC.

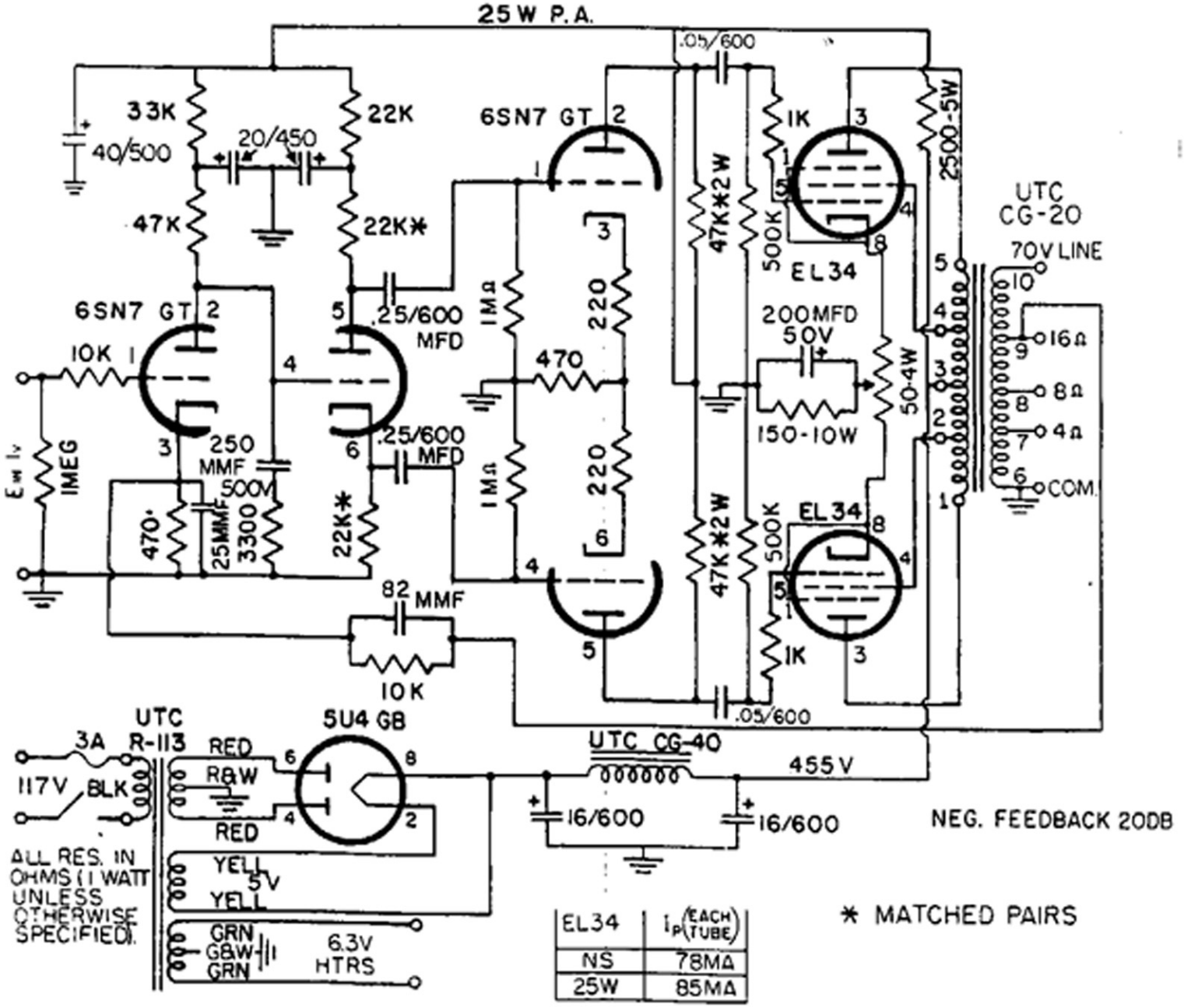

EL34	I_P (EACH TUBE)
NS	78MA
25W	85MA