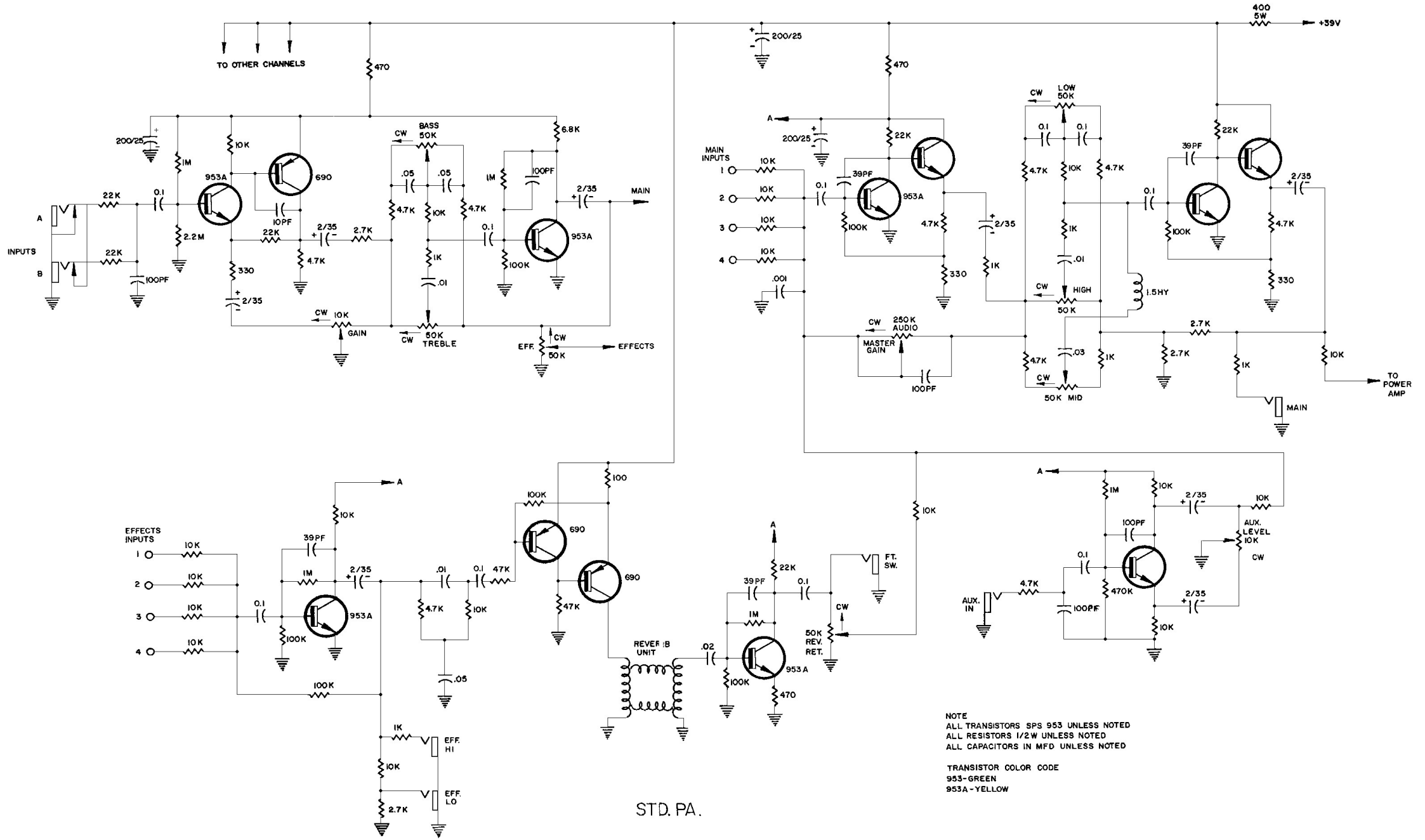

NOTE
ALL TRANSISTORS SPS 953 UNLESS NOTED
ALL RESISTORS 1/2W UNLESS NOTED
ALL CAPACITORS IN MFD UNLESS NOTED

TRANSISTOR COLOR CODE
953-GREEN
953A-YELLOW