KENWOOD

SOLID STATE STEREO AMPLIFIER

KA-4000

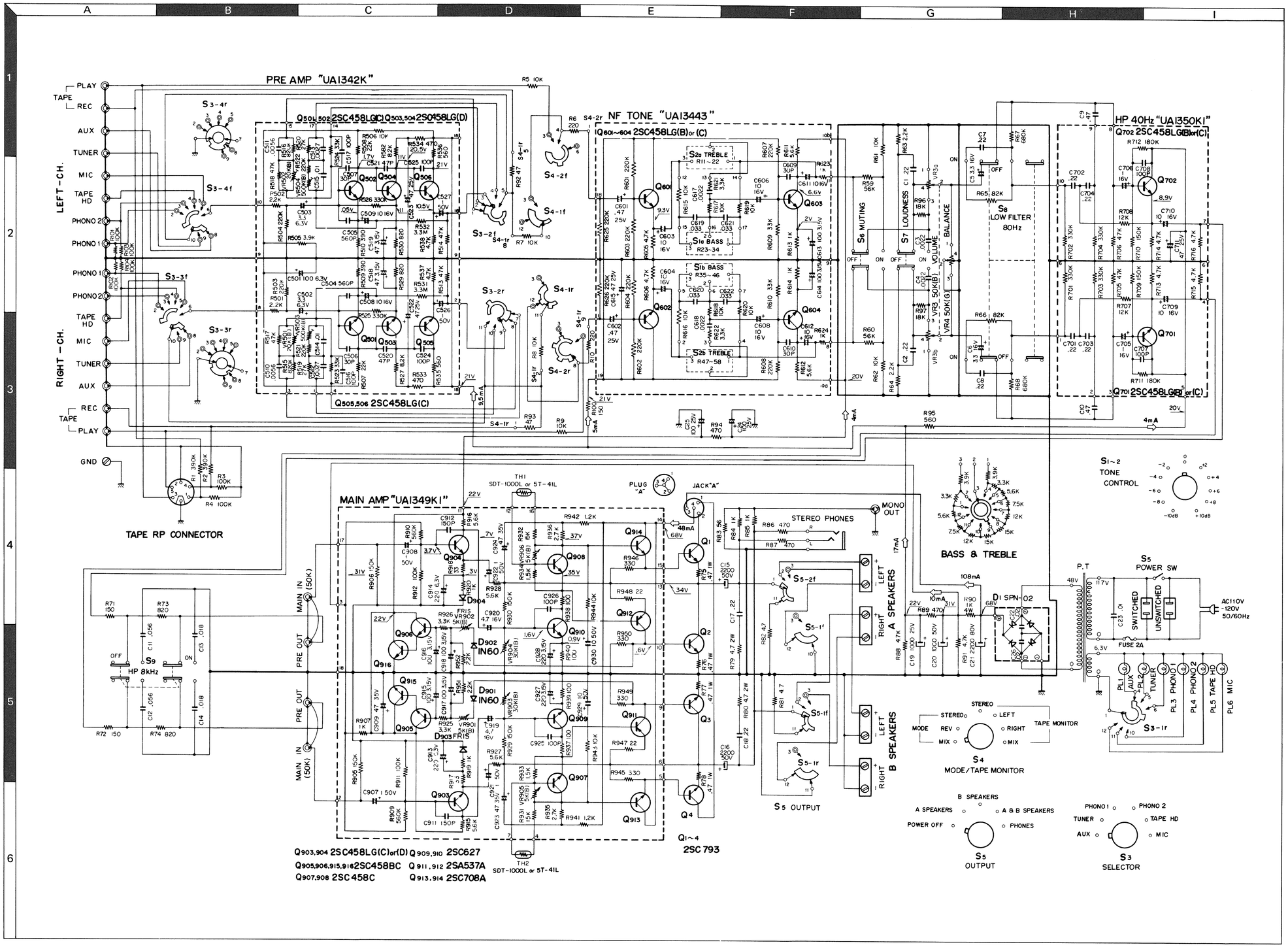

SPECIFICATIONS

Power Output:

Output power: 140 watts ±1 dB at 4 ohms load
120 watts ±1 dB at 8 ohms load
Dynamic power (IHF): 120 watts at 4 ohms load
100 watts at 8 ohms load
Continuous power: Each channel driven
53/53 watts at 4 ohms load
40/40 watts at 8 ohms load
Both channel driven
41/41 watts at 4 ohms load
32/32 watts at 8 ohms load

Power Bandwidth (IHF):

13 Hz to 30,000 Hz

Harmonic Distortion:

Less than .5% at rated output

Intermodulation Distortion: (60 Hz & 7,000 Hz, 4:1)

Less than .3% at rated output or at any level of less than rated output,
Less than .1% at −3 dB rated output.

Frequency Response:

Main Amp. only: 18 Hz to 50,000 Hz ±1 dB
High Level Input: 20 Hz to 50,000 Hz ±1 dB

Sensitivity: (for rated output at 8 ohms load)

Phono 1: 2 mV
Phono 2: 2 mV
Tape Head: 2.3 mV
MIC: 2 mV
AUX: 200 mV
Tuner: 200 mV
Tape Play: 200 mV
Main Amp. Input: 100 mV

Input Impedance: (at 1,000 Hz)

Phono 1: 100 K ohms
Phono 2: 100 K ohms
Tape Head: 100 K ohms
MIC: 100 K ohms
AUX, Tuner, Tape Play: 100 K ohms
Main Amp Input: 50 K ohms

Signal to Noise Ratio: (below rated output)

Phono 1: 65 dB
Phono 2: 65 dB
Tape Head: 63 dB
MIC: 67 dB
AUX, Tuner, Tape Play: 77 dB
Noise at minimum volume control: 1 mV at 8 ohms or .0125 milliwatts

Output Impedance: (at Speaker Terminal)

.29 ohm at 1,000 Hz
.52 ohm at 50 Hz
.29 ohm at 10,000 Hz

Damping Factor: (at 1,000 Hz)

55 at 16 ohms load
27.5 at 8 ohms load

Low Filter: (for rumble)

80 Hz cutoff, 12 dB per octave

High Filter: (for scratch)

8,000 Hz Cutoff, 12 dB per octave

Bass Control:

±10 dB at 100 Hz with 2 dB step switch

Treble Control:

±10 dB at 10,000 Hz with 2 dB step switch

Inputs:

Pair of Phono 1, Phono 2, Tape Head, AUX, Tuner, Tape Play, MIC and Main Amp. Inputs.

Outputs:

2 pairs of Stereo Speaker Outputs (4 to 16 ohms), Pre-amp Outputs, Headphone Jack, Low level MONO output, Tape Recording outputs, DIN standard Tape Rec. Play Connector, Switched and Unswitched AC Outlets.

Controls:

Input Selector Switch, Mode/Tape Monitor Switch, Output Selector Switch, Volume Control, Balance Control, Bass Control Switch, Treble Control Switch, Muting Switch (−20 dB), Loudness Contour Switch, Low Filter Switch, and High Filter Switch.

Special Features:

- U. S. Pat. Power Transistor Protection Circuit.
- 2 sets of Stereo Speaker Terminals and Front Panel Speaker Selector Switch.
- 2 dB Step Tone Controls.
- −20 dB Muting Switch.
- Light-up Input Indicators.
- Pre-amp. Outputs.
- Main amp. Inputs.
- Stereo Phone Jack.
- Tape Monitor Switch.

Power Consumption:

13 watts quiescent, 180 watts at full power

Dimension: (not including control knobs)

Width 16-5/16", Height 5-5/32", Depth 11-1/32"

Weight:

17.6 Lbs