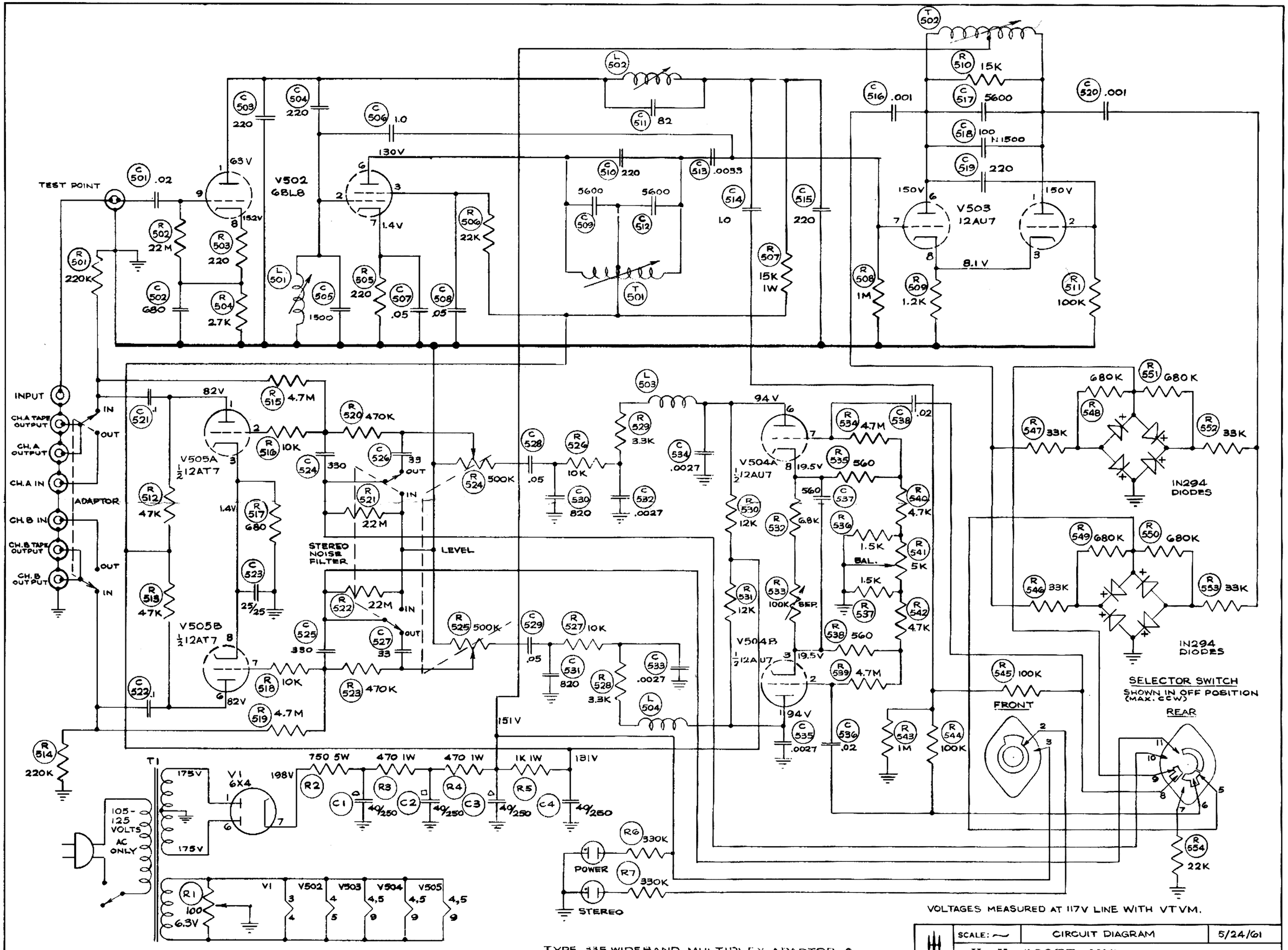

TYPE 335 WIDEBAND MULTIPLEX ADAPTOR & LM-35 WIDEBAND MULTIPLEX ADAPTOR KIT.

SCALE: ~	CIRCUIT DIAGRAM		5/24/61
H. H. SCOTT, INC. MAYNARD, MASS., U.S.A.			
DR. W.C., D.R.	ENG. DFM	DWG. NUMBER C-335-C1	SUB. 0
CH.	PROD.		