Revision	By	Date	Check
A	CSR 13	6/16/95	BZ
B	ECLO3166	10/6/95	BZ
C	EC1592	10/17/95	BZ
D	LO3181	4/9/96	BZ

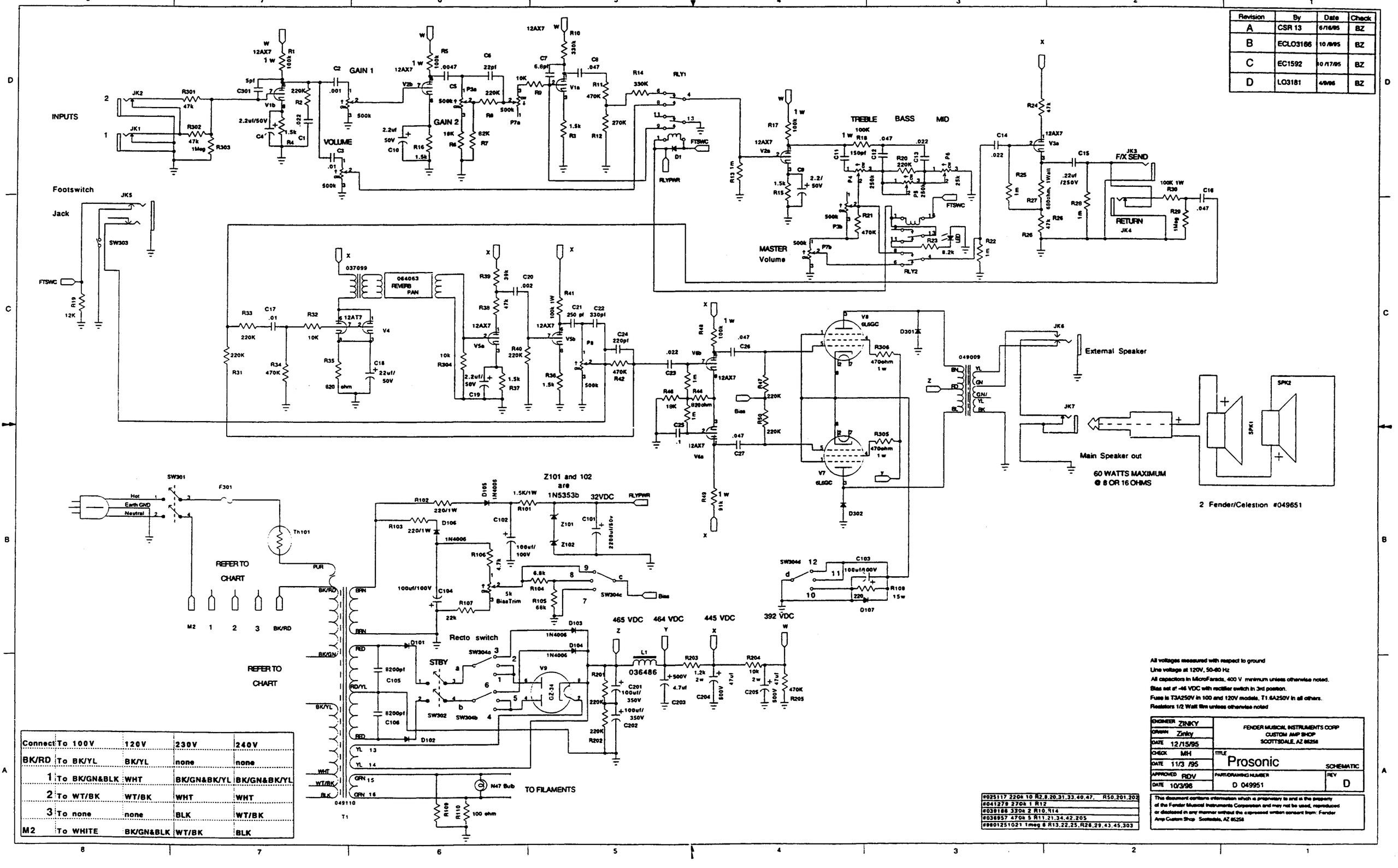

Connect	To 100V	120V	230V	240V
BK/RD	To BK/YL	BK/YL	none	none
1	To BK/GN&BLK	WHT	BK/GN&BK/YL	BK/GN&BK/YL
2	To WT/BK	WT/BK	WHT	WHT
3	To none	none	BLK	WT/BK
M2	To WHITE	BK/GN&BLK	WT/BK	BLK

All voltages measured with respect to ground
Line voltage at 120V, 50-60 Hz
All capacitors in MicroFarads, 400 V minimum unless otherwise noted.
Bias set at -46 VDC with rectifier switch in 3rd position.
Fuse is T3A250V in 100 and 120V models, T1.6A250V in all others.
Resistors 1/2 Watt film unless otherwise noted

#025117 220k 10 R2,8,20,31,33,40,47, R50,201,202	
#041279 270k 1 R12	
#039186 330k 2 R10,R14	
#036957 470k 5 R11,21,34,42,205	
#9801251021 1meg 8 R13,22,25,R26,29,43,45,303	

ENGINEER ZINKY	FENDER MUSICAL INSTRUMENTS CORP CUSTOM AMP SHOP SCOTTSDALE, AZ 85258		
DRAWN Zinky			
DATE 12/15/95			
CHECK MH	TITLE Prosonic		SCHEMATIC
DATE 11/3 /95			
APPROVED RDV	PART/DRAWING NUMBER D 049951		REV D
DATE 10/3/96			

This document contains information which is proprietary to and is the property of the Fender Musical Instruments Corporation and may not be used, reproduced or disclosed in any manner without the expressed written consent from: Fender Amp Custom Shop Scottsdale, AZ 85258