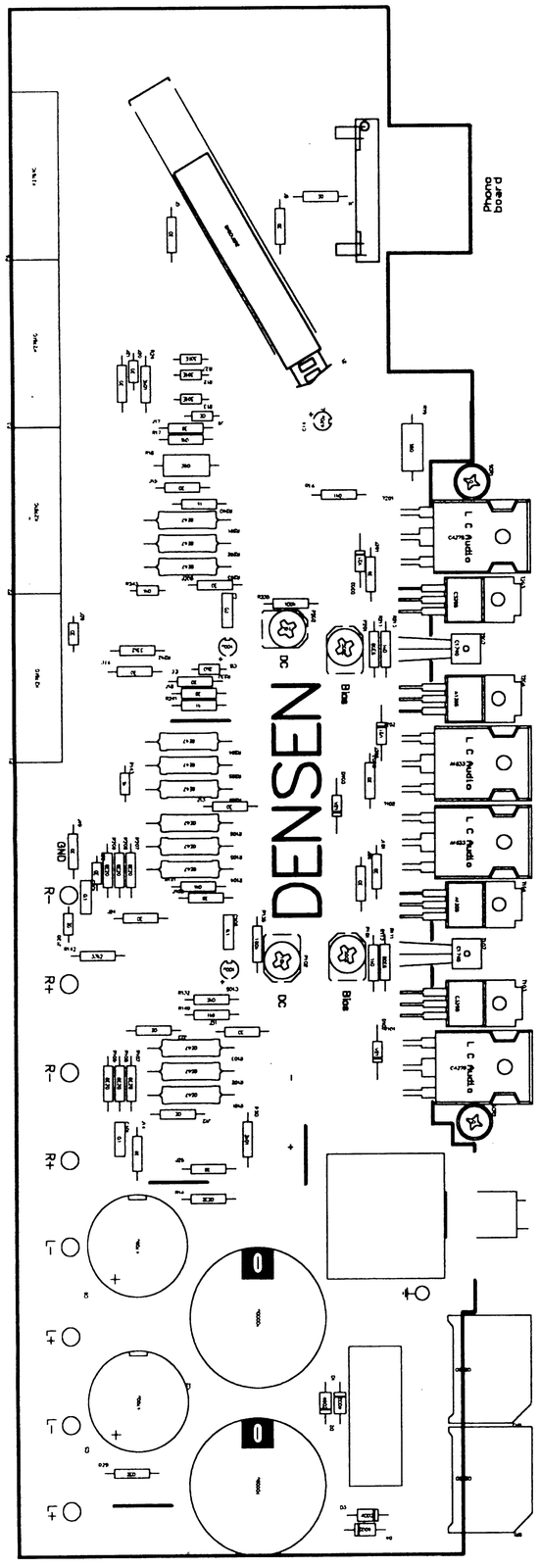

COMPONENT PLACEMENT

SCHEMATIC

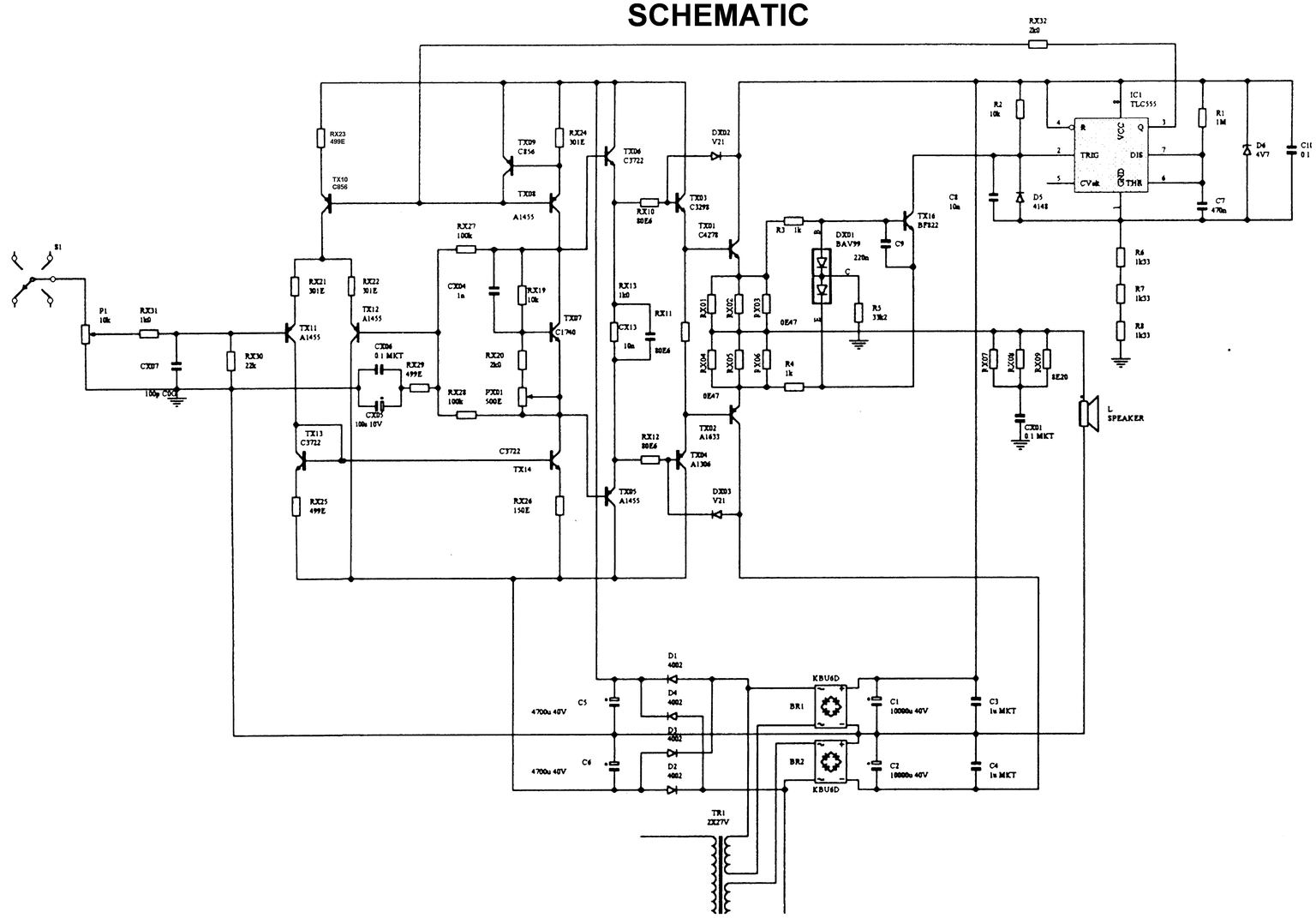

PCB

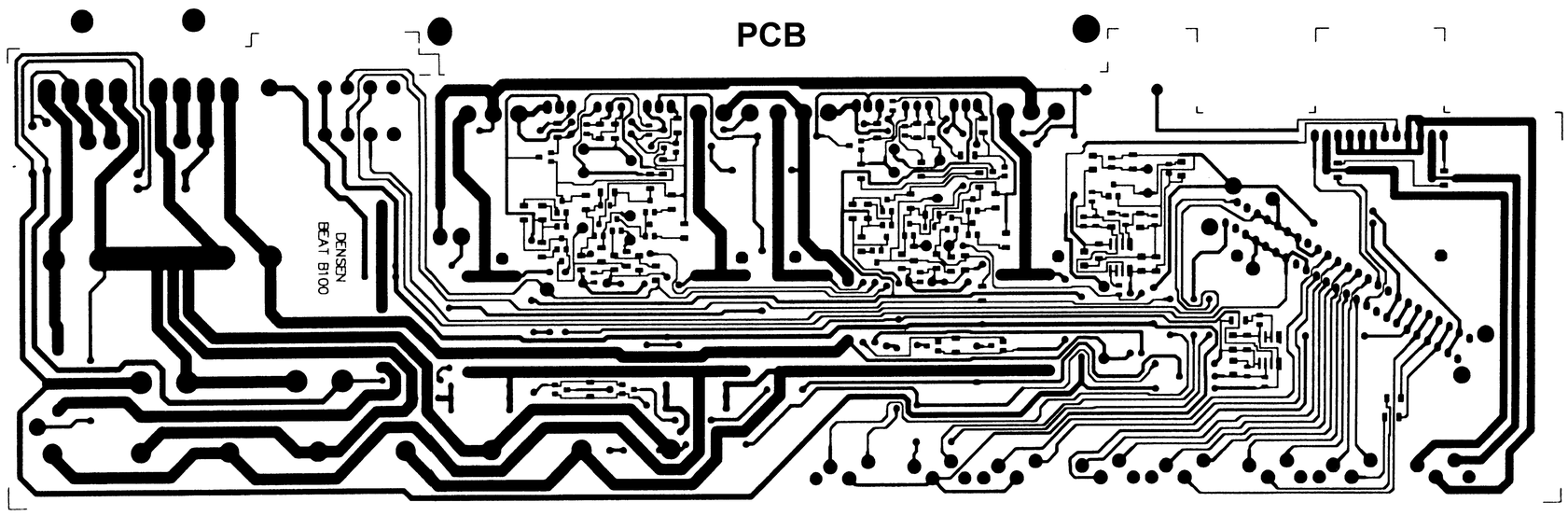

DENSEN B-100