VA12 POWER AMPLIFIER

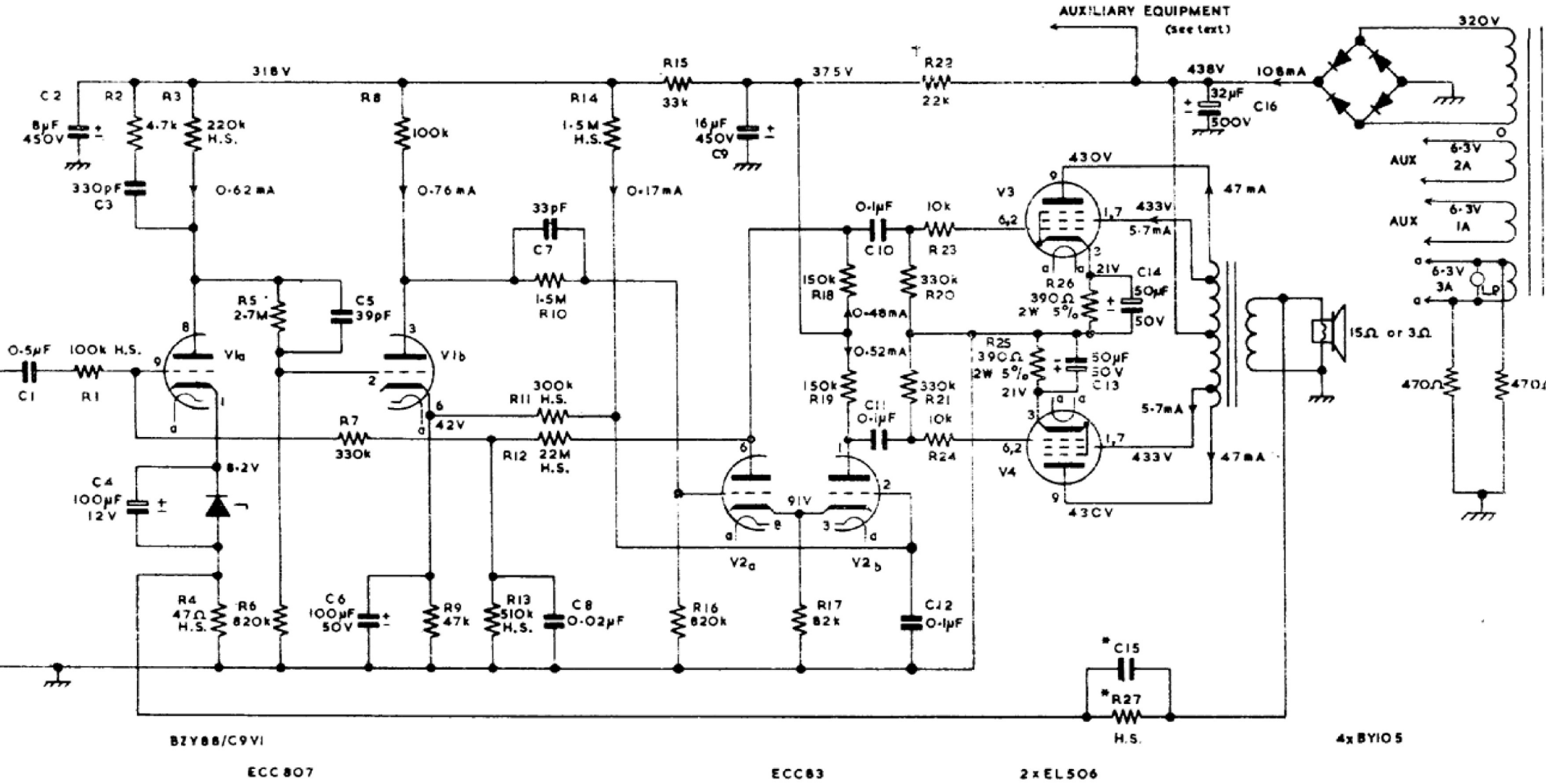

MAINS TRANSFORMER: GARDNERS TYPE BS6040
SECONDARY RATING 20–0–20–260–320–380V; 210mA

OUTPUT TRANSFORMER: DETAILS OVERLEAF

ALL RESISTORS ±10%
UNLESS OTHERWISE STATED
H.S. HIGH STABILITY
CAPACITOR VOLTAGES ARE PEAK-WORKING VALUES
* C15 = 270pF; R27 = 8·2k ±5% FOR 15Ω SPEAKER.
C15 = 560pF; R27 = 3·9k ±5% FOR 3Ω SPEAKER
† IF AUXILIARY EQUIPMENT IS USED R22 SHOULD BE ADJUSTED TO MAINTAIN 375V ACROSS C9