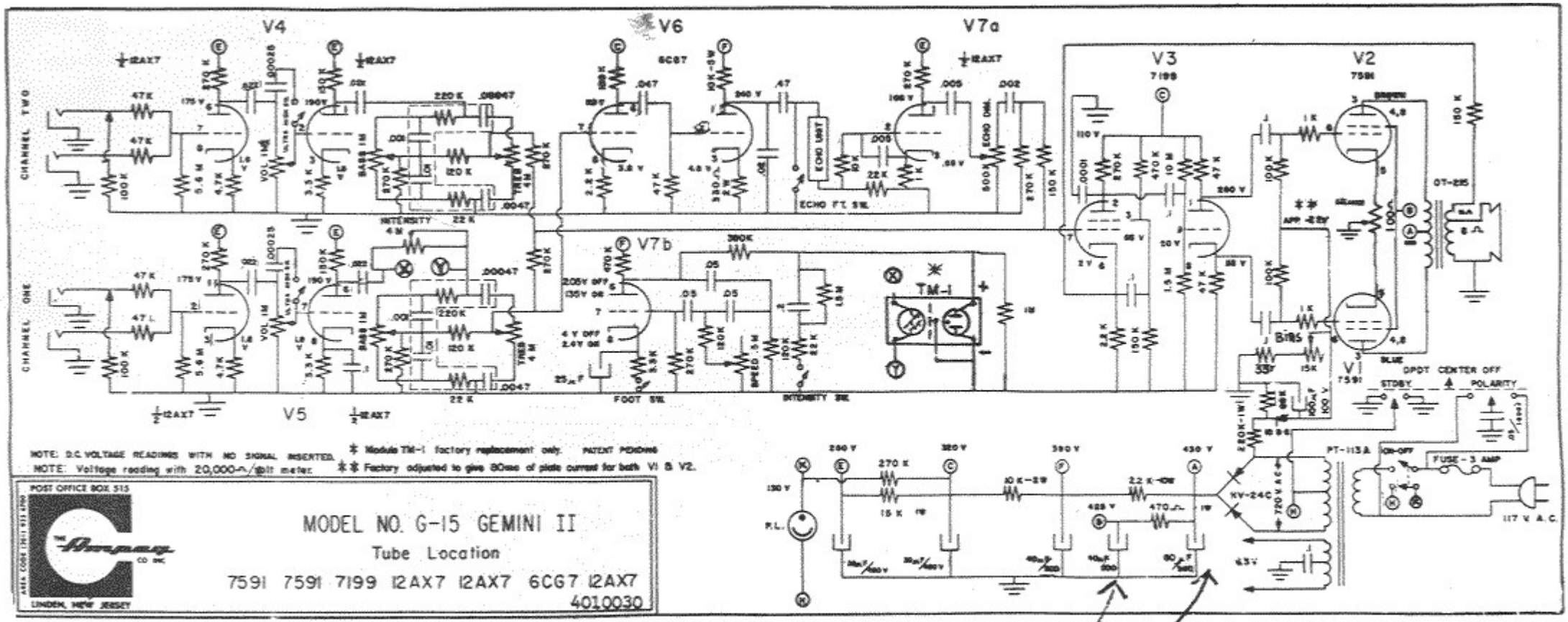
V4
V6
V7a
V3
V2
V7b
V5
V1
CHANNEL TWO
CHANNEL ONE
TM-1
ECHO FT. SW.
FOOT SW.
INTENSITY SW.
DPDT CENTER OFF
STDBY
POLARITY
PT-113A
FUSE - 3 AMP
117 V. A.C.
NOTE: D.C. VOLTAGE READINGS WITH NO SIGNAL INSERTED.
NOTE: Voltage reading with 20,000-Ω/volt meter.
* Module TM-1 factory replacement only. PATENT PENDING
** Factory adjusted to give 80ma of plate current for both V1 & V2.
POST OFFICE BOX 515
LINDEN, NEW JERSEY
MODEL NO. G-15 GEMINI II
Tube Location
7591 7591 7199 12AX7 12AX7 6CG7 12AX7
4010030

the B to a